PAC-2000F COLUMN COVERS

Petersen Aluminum's line of column covers offers architects superior design flexibility for structural beam applications, both interior and exterior. Utilizing a wide range of materials, including aluminum in an unmatched range of standard and custom colors, anodized aluminum, aluminum composite, stainless steel and copper, Petersen can custom fabricate to meet the most demanding specifications.

The design of the PAC-2000F Flush Joint column covers allows for a clean, precise installation, revealing only a hairline joint. The column sections are assembled using a rivnut/keyhole system to provide a tight inconspicuous vertical seam.

The PAC-2000F square column covers can be fabricated to various widths. Please contact Petersen Aluminum for complete details regarding our fabrication flexibility and capabilities.

MATERIALS

- .063 - .125 Aluminum
- 4mm Composite Aluminum
- 16 GA Stainless Steel

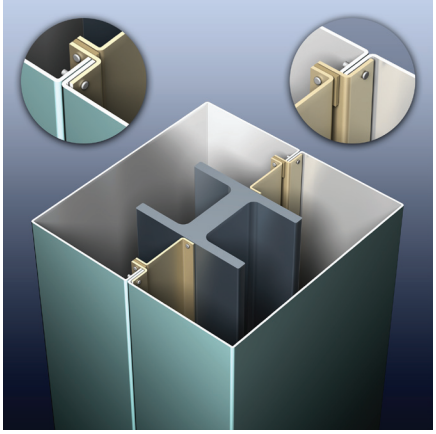

PAC-2000F

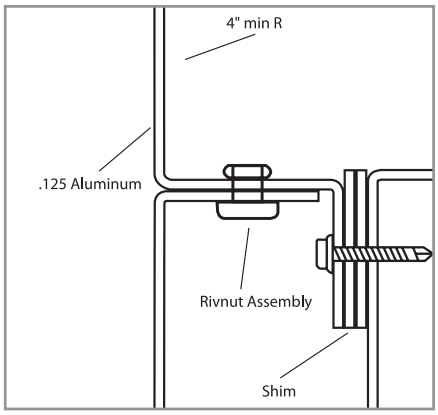

FLUSH JOINT

PAC-CLAD
Petersen Aluminum

www.pac-clad.com | 800-PAC-CLAD

©2008-2009 Petersen Aluminum Corporation