UL Construction No. 616

Uplift - Class 90 / Fire Not Investigated

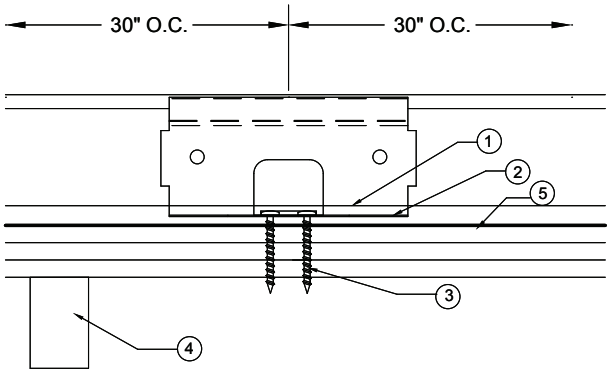

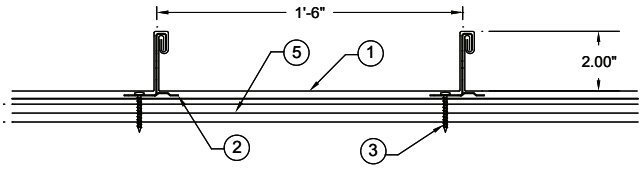

1 Metal Roof Deck Panel * / "Tite-Loc Plus"
Minimum 0.032 in. thick Aluminum, 18 in. max, 12 in. min. width, 2 in. high at the ribs. A line of sealant may be used at panel ends and sidelaps. Sidelap to be tightened and crimped with an electric seaming machine to an angle of 180 degrees. Crimping process to include the upper portion of the panel clip (Item 2).

2 Roof Deck Fasteners* (Panel Clips)
Any of the following. Clip spacing to be 30 in. OC max. Sealant may be used at the top of the clips:

Tite-Loc Plus Utility Clip: One piece assembly; 3 in. wide, approximately 2 in. high with two guide holes in base. Fabricated from No. 22 MSG coated steel.
Tite-Loc Plus Low Fixed Clip: One piece assembly; 3 in. wide, approximately 2-3/8 in. or 3 in. high, with three guide holes in base. Fabricated from No. 22 MSG coated steel.
Tite-Loc Plus Low Floating Clip: Two piece assembly; base approximately 2 in. wide, 1-11/16 in. long formed to engage upper tab. Fabricated from No. 16 MSG coated steel. Tab approximately 4-5/16 in. wide; 2-3/8 in. or 2-7/8 in. high, formed to engage base. Fabricated from No. 22 MSG coated steel. Base to have two guide holes.
Tite-Loc Plus AR Floating Clip: Two piece assembly; base approximately 2 1/2 in. wide, 1-7/8 in. long formed to engage upper tab. Fabricated from No. 18 MSG coated steel. Tab approximately 4-5/16 in. wide; 2-3/8 in. high, formed to engage base. Fabricated from No. 22 MSG coated steel. Base to have two guide holes.

3 Fasteners (Screws)
The plywood deck is secured to the supports with 2-1/2 in. drywall screws spaced 6 in. on center at the perimeter and 12 in. on center in the field. The Tite-Loc Plus Clip is fastened to the deck with two #10-12x1 in. long Phillips drive screws. Panel edges are attached to the plywood with 2-1/2 in. long drywall screws, spaced 6 in. on center and 1 in. from the panel edge.

4 Supports
Wood No. 2 or better, 2 in. x 10 in. x 179 in., spaced 24 in. on center.

5 Plywood Decking
19/32 in. B-C grade APA Rated. All joints are sealed with a 1 in. wide urethane Caulk (Bostik Chem) cured for 16 hours. The entire deck is covered with an asphalt-saturated felt per the manufacturers installation instructions.

5A Oriented Strand Board (OSB) / (Not Shown)
As an alternate, nom. 5/8 in. thick (19/32 in. actual) APA rated OSB may be substituted for plywood decking (Item 5). Installation procedures are to be same as for plywood.

Refer to General Information, Roof Deck Construction for items not evaluated.

*Bearing the UL Classification Marking

PETERSEN ALUMINUM CORPORATION www.pac-clad.com / email: sales@petersenmail.com

HQ: 1005 Tonne Road
Elk Grove Village, IL 60007
P: 800-PAC-CLAD
F: 800-722-7150

9060 Junction Drive
Annapolis Junction, MD 20701
P: 800-344-1400
F: 301-953-7627

10551 PAC Road
Tyler, TX 75707
P: 800-441-8661
F: 903-581-8592

350 73rd Ave., NE, Ste 1
Fridley, MN 55432
P: 877-571-2025
F: 866-901-2935

102 Northpoint Pkwy Ext, Bldg 1, Ste 100
Acworth, GA 30102
P: 800-272-4482
F: 770-420-2533