UL Construction No. 351

Uplift - Class 90 / Fire Not Investigated

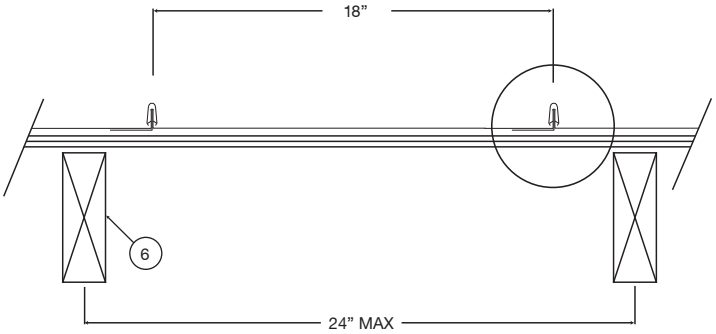

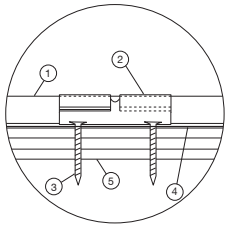

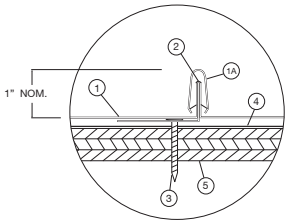

1 Metal Roof Deck Panels * / “Snap-On Standing Seam”
No. 24 MSG min coated steel panels, 18 in. wide max, 12 in. wide min, 1 in. high at ribs. Panels continuous over three or more clips with no endlaps. A bead of sealant may be used at panel side joints.

1A Panel Battens* / “Snap-On Standing Seam Cap”
No. 24 MSG min coated steel. “U” shaped, 1 in. high formed to snap over panel clips (Item 2).

2 Roof Deck Fasteners* (Panel Clips) / “Snap-On Standing Seam Clip”
One piece assembly, 2-1/2 in. wide, 1-5/16 in. high. Min thickness No. 26 MSG. Clips spaced 18 in. OC, fastened to plywood deck.

3 Fasteners (Screws)
Fasteners used to attach panel clips (Item 2) to plywood to be No. 10 by 1-1/4 in. long bugle-head coated steel wood screws with a No. 2 Phillips drive. Min two fasteners per clip to be used.

4 Underlayment
Underlayment used over plywood deck to be type 30 organic felt. Sides overlapped min 2 in., end laps per manufacturer’s instructions. Felt nailed to plywood deck with 1 in. long galv steel roofing nails, located per manufacturer’s instructions. Nail spacing to be max 12 in. OC at the side lap and max 24 in. OC in interior rows.

5 Plywood Decking
Plywood decking to be graded per PS83 specification, 19/32 in. thick, exposure 1, APA Rated 20 in. OC, square edged. Butt ends not blocked.

6 Supports
Spaced maximum of 24 in. OC. Any of the following types may be used to support the plywood decking:

A 2 by 6 in. minimum No. 2 grade A.F.P.A. S-P-F Hemlock Fir, Douglas Fir, Douglas Fir or Southern Pine or equivalent.
B Wood trusses with a nominal 2 by 4 in. upper chord of the same grade as Item a.
C No. 22 MSG min cold formed coated steel (min yield to be 33,000 psi).

7 Plywood Fasteners
Fasteners used to attach the plywood deck to the supports to be as follows:

A For plywood-to-wood supports No. 8-18 by 1-7/8 in. long bugle-head steel screws with a No. 2 Phillips drive, a “Hi-Low” thread pattern and an “S-Point”.
B As an alternate to Item a, 8d by 2-1/2 in. long deformed shank common nails may be used.
C For plywood-to-steel supports for a steel thickness less than No. 20 MSG No. 7-19 by 1-1/4 in. long bugle head steel screws with a No. 2 Phillips head drive “Hi-Low” threads and an “S-Point” . For a steel thickness greater than No. 2 20 MSG to No. 16 MSG, No. 6-20 by 1-1/4 in. long bugle-head steel screws with a No. 2 Phillips drive and an S12 (TEKS/3)® point.

Spacing: Fastener spacing for all fastener types to be 6 in. OC at the plywood edges and 12 in. OC in the interior.

Refer to General Information, Roof Deck Construction (Roofing Materials and Systems Directory) for items not evaluated.

*Bearing the UL Classification Marking

PETERSEN ALUMINUM CORPORATION www.pac-clad.com / email: sales@petersenmail.com

HQ: 1005 Tonne Road
Elk Grove Village, IL 60007
P: 800-PAC-CLAD
F: 800-722-7150

9060 Junction Drive
Annapolis Junction, MD 20701
P: 800-344-1400
F: 301-953-7627

10551 PAC Road
Tyler, TX 75707
P: 800-441-8661
F: 903-581-8592

350 73rd Ave., NE, Ste 1
Fridley, MN 55432
P: 877-571-2025
F: 866-901-2935

102 Northpoint Pkwy Ext, Bldg 1, Ste 100
Acworth, GA 30102
P: 800-272-4482
F: 770-420-2533