TELEPHONE (AREA CODE 214)
565-0593
565-0594
421-1400

CABLE ADDRESS "DALAB"

DALLAS LABORATORIES, INC.

CONSULTANTS AND TECHNOLOGISTS
ANALYTICAL AND RESEARCH CHEMISTS —
CHEMICAL ENGINEERS — PETROLEUM ENGINEERS

P. O. BOX 152837
1323 WALL ST

DALLAS, TEXAS 75315

MEMBERS
AMERICAN INSTITUTE OF CHEMICAL ENGINEERS
NATIONAL SOCIETY OF PROFESSIONAL ENGINEERS
TEXAS SOCIETY OF PROFESSIONAL ENGINEERS
ASM INTERNATIONAL
SOCIETY OF PETROLEUM ENGINEERS OF AIME

MEMBERS
AMERICAN CHEMICAL SOCIETY
AMERICAN SOCIETY FOR TESTING MATERIAL
AMERICAN NATIONAL STANDARDS INSTITUTE
AMERICAN SOCIETY FOR QUALITY CONTROL

DATE: May 5, 1992

Report #18154

SUBMITTED BY: Petersen Aluminum Corporation
955 Estes Avenue
Elk Grove Village, IL 60007

DATE OF TESTING: April 22, 1992

TESTING FACILITY: The Dallas Laboratories, Inc.
Dallas, Texas

WITNESSED BY:

Yoosef Lavi, P.E. - Lavi & Associates
Andy Wilson - The Dallas Laboratories, Inc.
Larry Warren - The Dallas Laboratories, Inc.
Don Davidson - Petersen Aluminum Corporation
Josh Jacobi - Petersen Aluminum Corporation

TESTS:

ASTM E 331-86- Standard test method for water penetration of exterior windows, curtain walls and doors by uniform static air pressure difference.

ASTM E 283-91- Standard test method for rate of air leakage through exterior windows, curtain walls, and doors.

DESCRIPTION OF UNIT TESTED

Type: Metal deck roof panel

Series: Integral Standing Seam

Panel Profile: 18" wide by 1-1/2" high

Overall size: 8'-0" wide by 10'-0" long

THE ANALYSES OF THE ABOVE SAMPLE OR SAMPLES DO NOT IMPLY AN ENDORSEMENT. THIS REPORT, OR ANY PART THEREOF MAY NOT BE REPRODUCED OR USED FOR ADVERTISING PURPOSES WITHOUT OUR EXPRESS WRITTEN CONSENT.

Test unit was installed over an 8'-0" wide by 10'-0" long chamber, at a slope of approximately 2:12 in the following sequence.

15/32" plywood decking supported at 24" o.c. was installed as substrate support. Type 30 organic felt as underlayment was installed over the plywood using 3/8" long steel staples. 18" wide by .024" thick panels were attached to the substrate using clips at 24" o.c.. The Clips were made of .050" thick extruded aluminum, and were fastened with 2 No. 10 x 1" long coated steel screws. Details of panel installation, and panel profile are shown in figure No. 1.

SUMMARY OF TEST RESULTS

Title of test	Test Method	Measured
Air Infiltration @ 1.57 psf	ASTM E 283-91	.02CFM/Ft2
Air Infiltration @ 6.24 psf	ASTM E 283-91	.06CFM/Ft2
Air Exfiltration @ 1.57 psf	ASTM E 283-91	.03CFM/Ft2
Air Exfiltration @ 6.24 psf	ASTM E 283-91	.11CFM/Ft2
Water Penetration @ 12.00 psf	ASTM E 331-86	No Leakage

The above test results were obtained using the applicable ASTM test methods.

TEST SUPERVISED BY:

Yoosef Lavi

Yoosef Lavi, P.E.

TEST CONDUCTED BY:

Larry Warren

Larry Warren

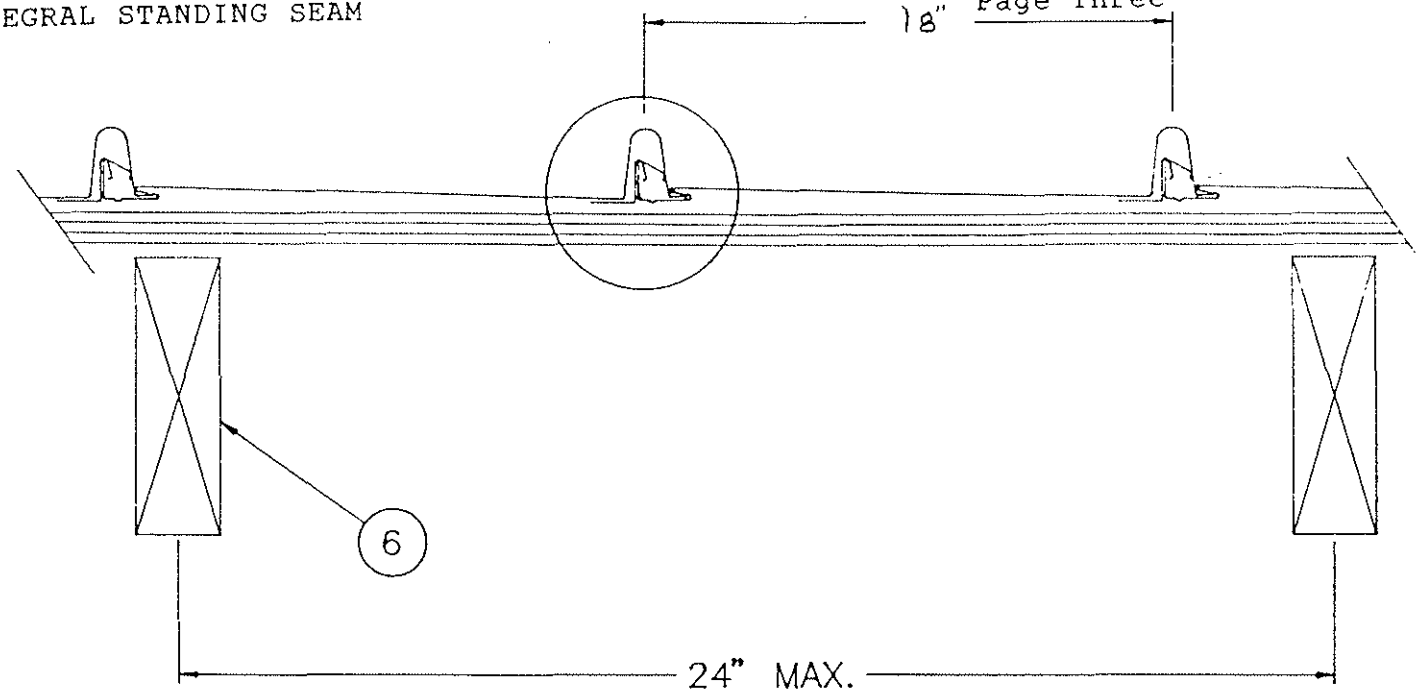

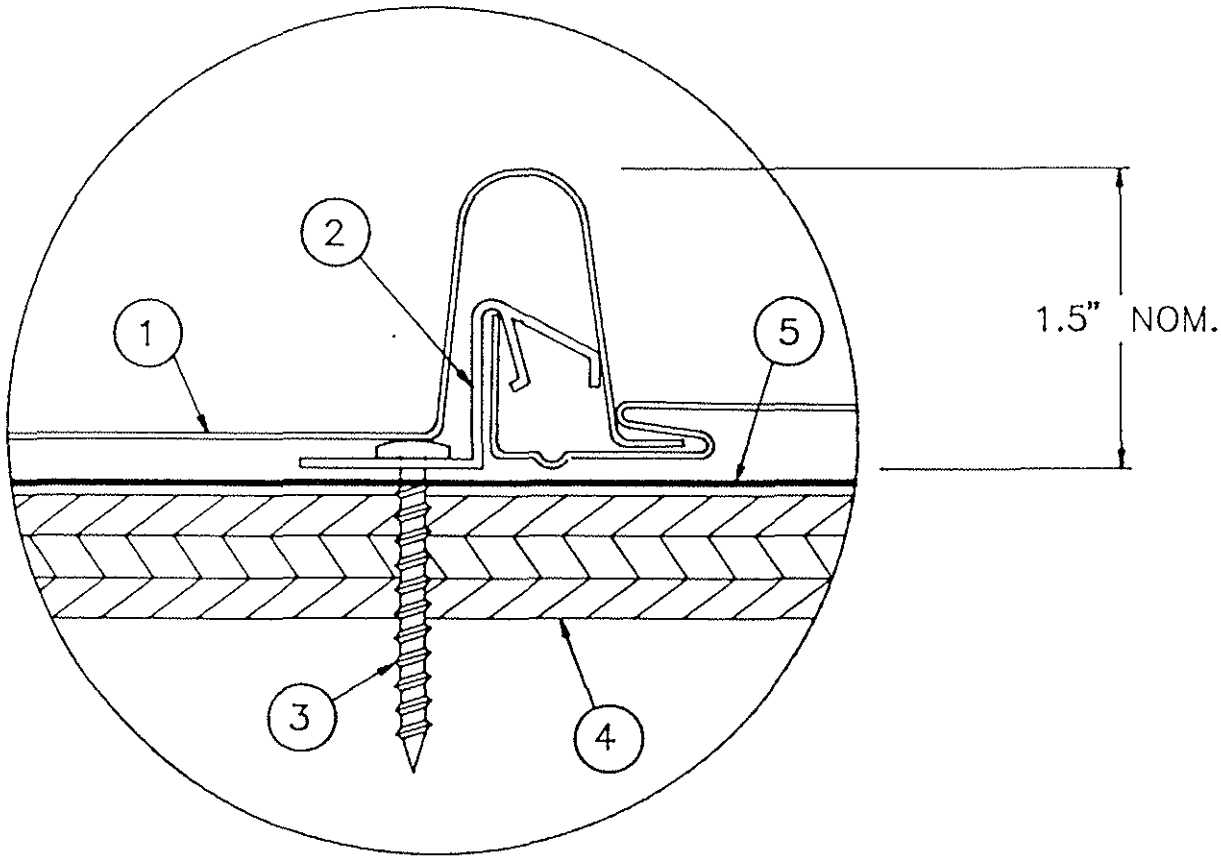

FIGURE NO. 1

FIGURE NO. 1 DESCRIPTIONS

1. **Metal roof deck Panels-** No. 24 msg coated steel panels, 18 in. wide, 1.5 in. high, with no endlaps.

2. **Roof Panel Clips-** One piece assembly, 2-1/2 in. wide, 7/8 in. high, .050 in. thick extruded aluminum spaced 24 in. o.c.,

3. **Fasteners-** Fasteners used to attach panel clips to plywood deck, No. 10 by 1 in. long.

4. **Plywood decking-** Plywood decking, 15/32 in. thick.

5. **Underlayment-** Underlayment used over plywood deck was type 30 LB. roofing felt. Felt fastened to plywood deck with staples at random spacing.

6. **Supports-** spaced at 24 in. o.c..