Construction No. 347

Uplift – Class 90 **Fire Not Investigated**

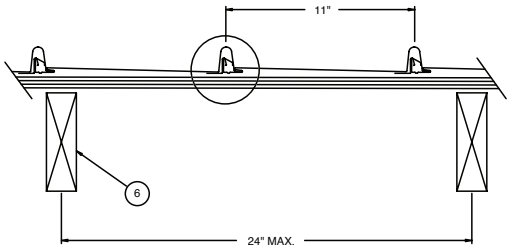

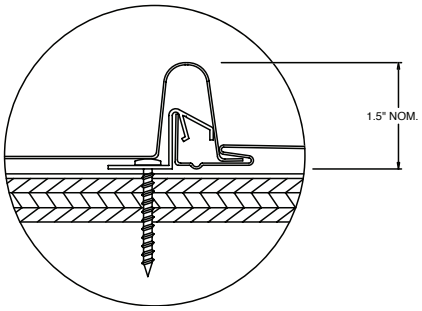

1. **Metal Roof Deck Panels* -** No. 24 MSG min coated steel panels, 11 in. wide, _ in. high at female side rib and 1-1/2 in. high at the male side rib. Panels continuous over three or more clips with no endlaps. A bead of sealant may be used at panel side joints.
   Petersen Aluminum Corp. – "11 in. Integral Standing Seam Panel"
2. **Roof Deck Fasteners* (Panel Clips) –** One piece assembly 2-1/2 in. wide, 7/8 in high. Min thickness 0.050 in extruded aluminum. Clips spaced 18 in. OC, fastened to plywood deck.
   Petersen Aluminum Corp. – "Integral Clip"
3. **Fasteners (Screws) –** Fasteners used to attach panel clips (Item 2) to plywood to be No. 10-12 by 1-5/8 in. long truss head, No. 2 Phillips drive coated steel screws. Min two fasteners per clip to be used.
4. **Underlayment –** Underlayment used over plywood deck to be Type 30 organic felt. Sides overlapped min 8 in., end laps per manufacturer's instructions. Felt nailed to plywood deck with staples at random spacing.
5. **Plywood Decking –** Plywood decking to be graded per PS83 specification. 19/32 in. thick, exposure 1, APA rated 20 in. OC, square edged. Butt ends not blocked.
6. **Supports –** Spaced max of 24 in. OC. Any of the following types may be used to support the plywood decking:
   a) Nom 2 by 6 in., min No. 2 grade A.F.P.A. S-P-F Hemlock Fir, Douglas Fir or Southern Pine OR EQUIVALENT.
   b) Wood trusses with a nom 2 by 4 in. upper chord of the same grade as Item a.
   c) No. 22 MSG min cold formed coated steel (min yield to be 33,000 psi).
7. **Plywood Fasteners –** Fasteners used to attach the plywood deck to the supports to be as follows:
   a) For plywood-to-wood supports No. 8-18 by 1-7/8 in. long bugle-head steel screws with a No. 2 Phillips drive, a "hi-Low" thread pattern and an "S-Point".
   b) As an alternate to Item a, 8d by 1-1/2 in. long deformed shank common nails may be used.
   c) For plywood-to-steel supports for a steel thickness less than No. 20 MSG No. 7 19 by 1-1/4 in. long bugle-head steel screws with a No. 2 Phillips head drive, "Hi-Low" Threads and an "S-Point". For a steel thickness greater than No. 2 20 MSG to No. 16 MSG, No. 6-20 by 1-1/4 in. long bugle head steel screws with a No. 2 Phillips drive and an S12 (TEKS/3)® point.

   Spacing: Fastener spacing for all fastener types to be 6 in. OC at the plywood edges and 12 in OC in the interior.
   Refer to General Information, Roof Deck Construction (Building Material Directory) for items not evaluated.

*Bearing the UL Classification Marking

PETERSEN ALUMINUM CORPORATION www.pac-clad.com / email: sales@petersenmail.com

HQ: 1005 Tonne Road
Elk Grove Village, IL 60007
P: 800-PAC-CLAD
F: 800-722-7150

9060 Junction Drive
Annapolis Junction, MD 20701
P: 800-344-1400
F: 301-953-7627

10551 PAC Road
Tyler, TX 75707
P: 800-441-8661
F: 903-581-8592

350 73rd Ave., NE, Ste 1
Fridley, MN 55432
P: 877-571-2025
F: 866-901-2935

102 Northpoint Pkwy Ext, Bldg 1, Ste 100
Acworth, GA 30102
P: 800-272-4482
F: 770-420-2533