Construction No. 347

Uplift – Class 90 **Fire Not Investigated**

ALTERNATE CONSTRUCTION

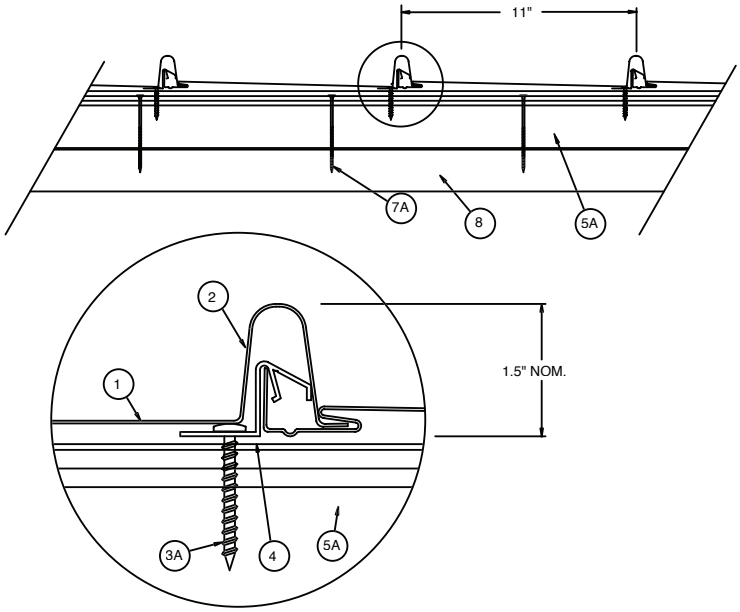

1. **Metal Roof Deck Panels* -** No. 24 MSG min coated steel panels, 11 in. wide, _ in. high at female side rib and 1-1/2 in. high at the male side rib. Panels continuous over three or more clips with no endlaps. A bead of sealant may be used at panel side joints.
   Petersen Aluminum Corp. – "11 in. Integral Standing Seam Panel"
2. **Roof Deck Fasteners* (Panel Clips) –** One piece assembly 2-1/2 in. wide, 7/8 in high. Min thickness 0.050 in extruded aluminum. Clips spaced 18 in. OC, fastened to plywood deck.
   Petersen Aluminum Corp. – "Integral Clip"

3A. **Fasteners (Screws) –** Fasteners used to attach panel clip (Item 2) to nailable insulation (Item 5A) to be 8-8 by 1-1/4 in. long bugle-head coated steel wood screws with a No. 2 Phillips drive. Min two fasteners per clip to be used.

4. **Underlayment –** Underlayment used over plywood deck to be Type 30 organic felt. Sides overlapped min 8 in., end laps per manufacturer's instructions. Felt nailed to plywood deck with staples at a random spacing.

5A. **Nailable Insulation –** Consisting of 1 in. min to 3-1/2 in. max nom thickness. Classified Polyisocyanurate foamed plastic with a factory laminated 7/16 in. thick APA rated O.S.B. Density of foamed plastic to be 2 pcf.

6A. **Supports (Purlins) – Not Shown –** Purlins used for liner panel support to be cold formed steel sections. As alternatives, structural steel components (hot rolled beams, channels, open web joists, etc.) may beused. Min gauge and yield to depend on design considerations for uplift loading. Max spacing to depend on design considerations for uplift loading.

7A. **Fasteners (Screws) –** Fasteners used to attach nailable insulation to steel deck (Item 8) to be No. 11-13, No. 3 Phillips drive, truss head, painted steel screws. Length to depend on overall thickness of deck and to penetrate steel deck _ in. min. A 2 in. diam formed pressure plate fabricated from No. 22 MSG coated steel to be used with each screw. Fasteners located in three rows along the 8 ft. length of the nailable insulation beginning 6 in. from the 8 ft. edges with a row down the center and spaced 21 in. beginning 6 in. from the 4 ft. edges OC. A total of 15 fasteners used for each 4 by 8 ft. board.

8. **Liner Panel (Steel Deck) –** No. 22 MSG min thickness coated steel. Min depth 1-1/2 in. max pitch 6 in. fabricated to various profiles. Min yield strength 33,000 psi. Fastened to supports (Item 6A) with fastener type and spacing per liner panel manufacturer's instructions for uplift loading.

9. **Gypsum Board (Optional) – Not Shown -** Max thickness 5/8 in. supplied in 4 by 8 ft. sheets. Butt joints located over crests of steel deck. Fastened to deck with same fasteners used for nailable insulation.
   Refer to General Information, Roof Deck Construction (Roofing Materials and Systems Directory) for items not evaluated.

*Bearing the UL Classification marking.

PETERSEN ALUMINUM CORPORATION www.pac-clad.com / email: sales@petersenmail.com

HQ: 1005 Tonne Road
Elk Grove Village, IL 60007
P: 800-PAC-CLAD
F: 800-722-7150

9060 Junction Drive
Annapolis Junction, MD 20701
P: 800-344-1400
F: 301-953-7627

10551 PAC Road
Tyler, TX 75707
P: 800-441-8661
F: 903-581-8592

350 73rd Ave., NE, Ste 1
Fridley, MN 55432
P: 877-571-2025
F: 866-901-2935

102 Northpoint Pkwy Ext, Bldg 1, Ste 100
Acworth, GA 30102
P: 800-272-4482
F: 770-420-2533