TITE-LOC

Eave Detail

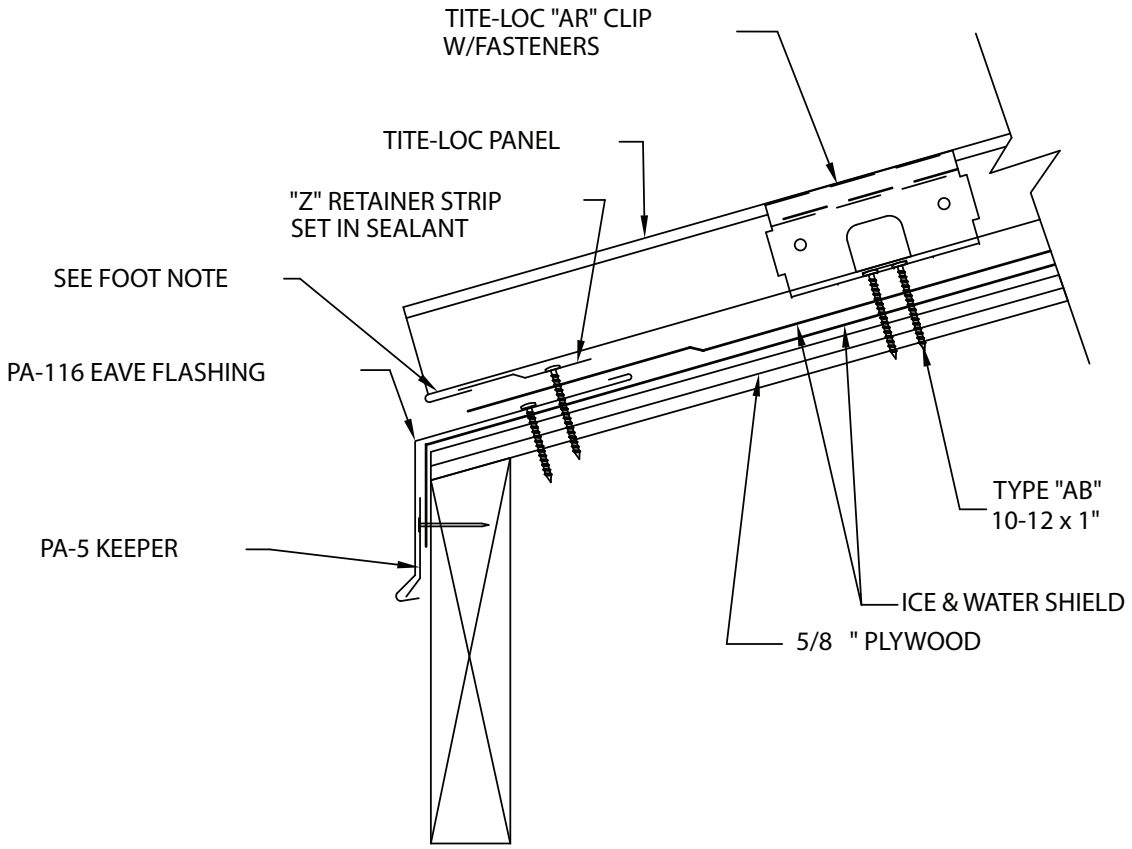

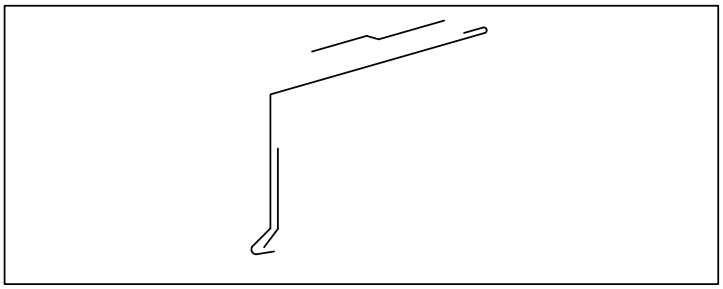

* GAP APPROPRIATE FOR EXPANSION/CONTRACTION (CONSULT FACTORY)

Job Name:	
Date:	
Contractor:	Notes:

PETERSEN ALUMINUM CORPORATION www.pac-clad.com / email: sales@petersenmail.com

HQ: 1005 Tonne Road
Elk Grove Village, IL 60007
P: 800-PAC-CLAD
F: 800-722-7150

9060 Junction Drive
Annapolis Junction, MD 20701
P: 800-344-1400
F: 301-953-7627

10551 PAC Road
Tyler, TX 75707
P: 800-441-8661
F: 903-581-8592

350 73rd Ave., NE, Ste 1
Fridley, MN 55432
P: 877-571-2025
F: 866-901-2935

102 Northpoint Pkwy Ext, Bldg 1, Ste 100
Acworth, GA 30102
P: 800-272-4482
F: 770-420-2533

TITE-LOC

Eave Detail

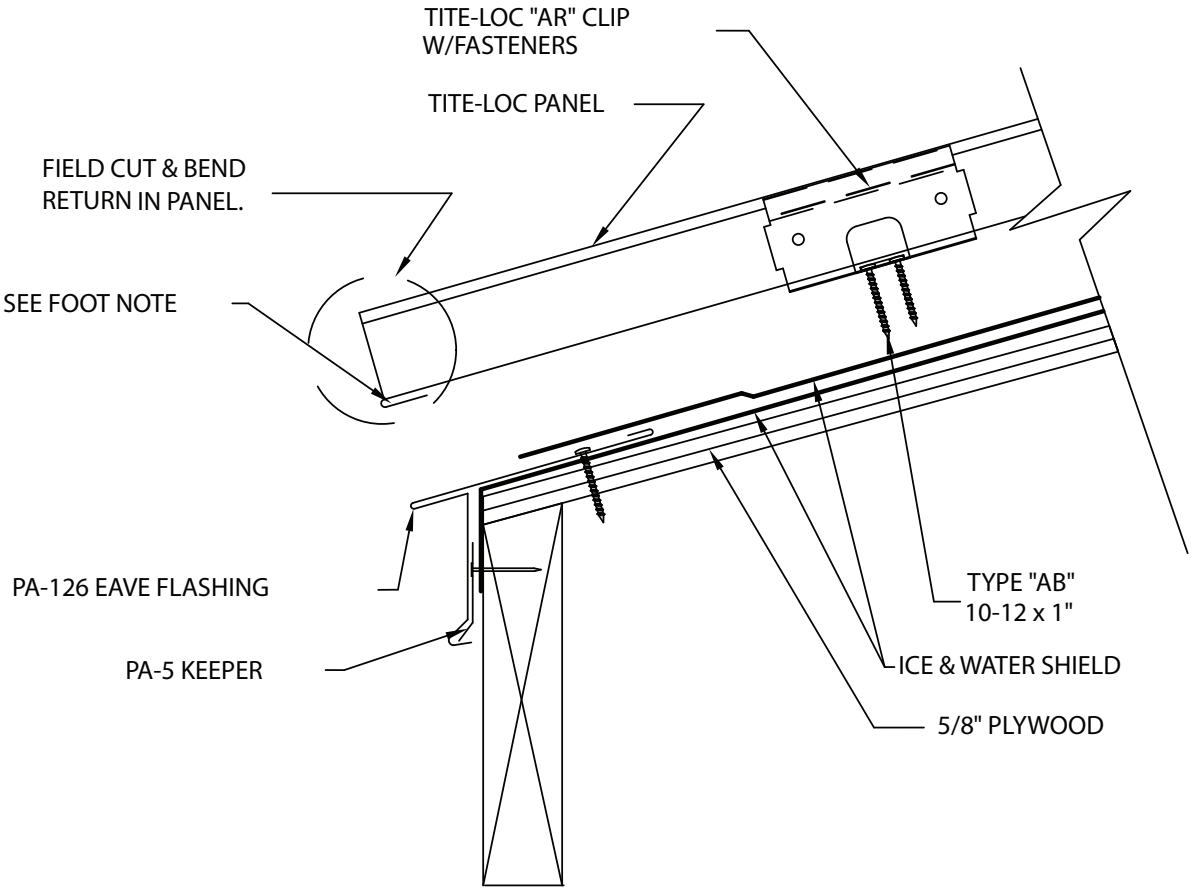

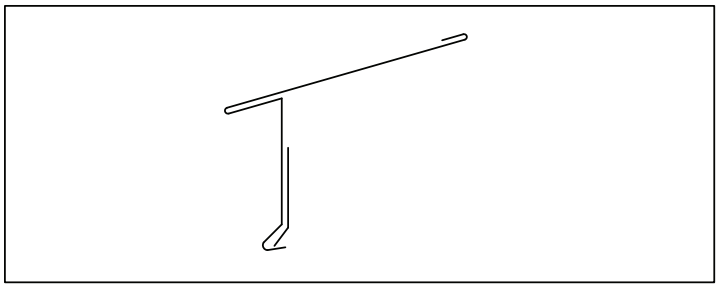

* GAP APPROPRIATE FOR EXPANSION/CONTRACTION (CONSULT FACTORY)

Job Name:	
Date:	
Contractor:	Notes:

PETERSEN ALUMINUM CORPORATION www.pac-clad.com / email: sales@petersenmail.com

HQ: 1005 Tonne Road
Elk Grove Village, IL 60007
P: 800-PAC-CLAD
F: 800-722-7150

9060 Junction Drive
Annapolis Junction, MD 20701
P: 800-344-1400
F: 301-953-7627

10551 PAC Road
Tyler, TX 75707
P: 800-441-8661
F: 903-581-8592

350 73rd Ave., NE, Ste 1
Fridley, MN 55432
P: 877-571-2025
F: 866-901-2935

102 Northpoint Pkwy Ext, Bldg 1, Ste 100
Acworth, GA 30102
P: 800-272-4482
F: 770-420-2533

TITE-LOC

Eave Detail

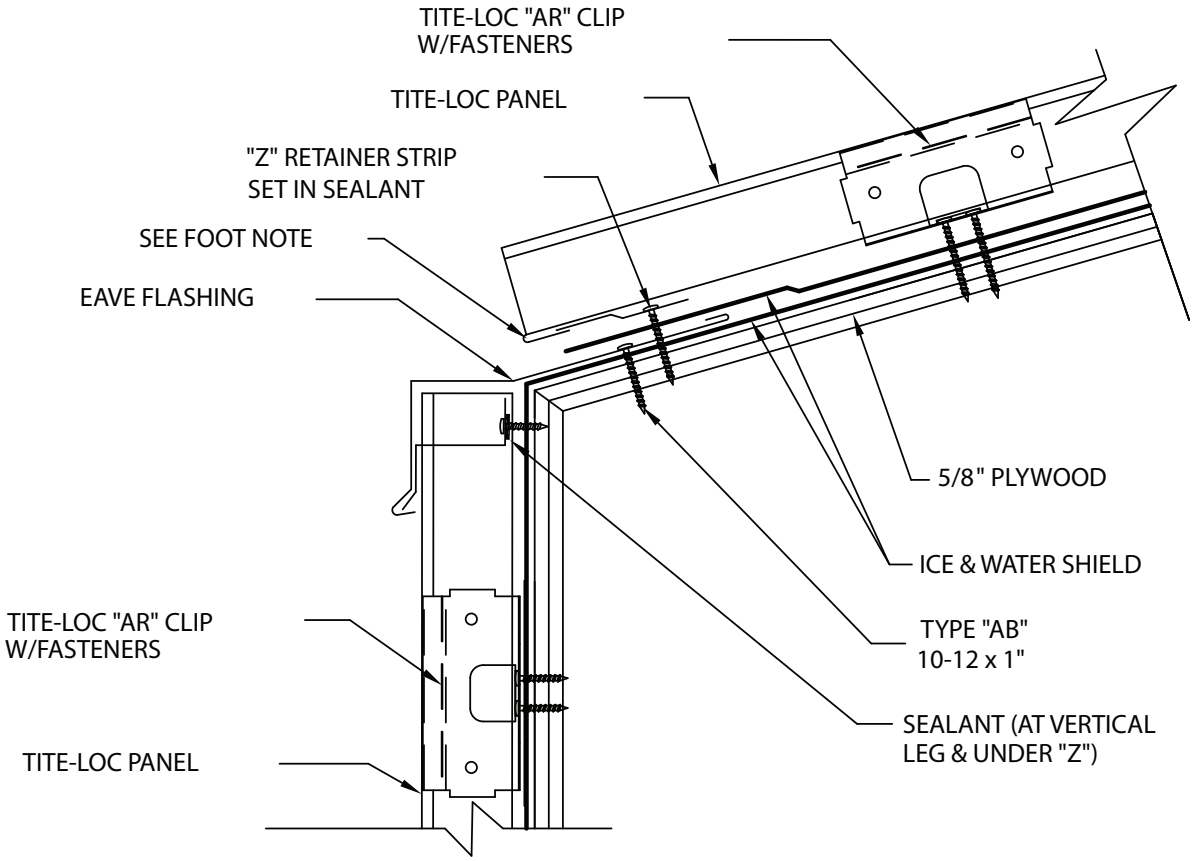

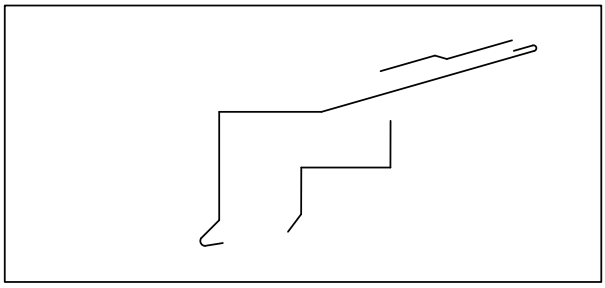

* GAP APPROPRIATE FOR EXPANSION/CONTRACTION (CONSULT FACTORY)

Job Name:	
Date:	
Contractor:	Notes:

PETERSEN ALUMINUM CORPORATION www.pac-clad.com / email: sales@petersenmail.com

HQ: 1005 Tonne Road
Elk Grove Village, IL 60007
P: 800-PAC-CLAD
F: 800-722-7150

9060 Junction Drive
Annapolis Junction, MD 20701
P: 800-344-1400
F: 301-953-7627

10551 PAC Road
Tyler, TX 75707
P: 800-441-8661
F: 903-581-8592

350 73rd Ave., NE, Ste 1
Fridley, MN 55432
P: 877-571-2025
F: 866-901-2935

102 Northpoint Pkwy Ext, Bldg 1, Ste 100
Acworth, GA 30102
P: 800-272-4482
F: 770-420-2533