UL CONSTRUCTION NO. 261

WIND-UPLIFT - CLASS 90 OR 60 (SEE ITEM NO. 4)/
FIRE NOT INVESTIGATED

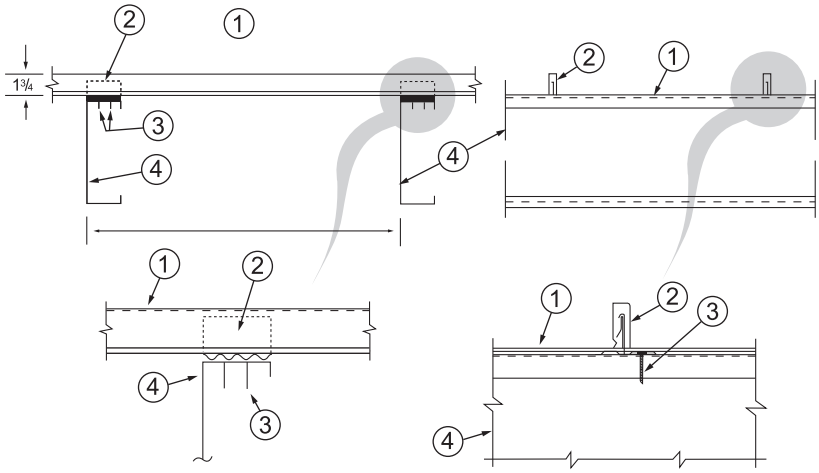

1	Metal Roof Deck Panels* "Snap-Clad"	0.032 in. thick aluminum or No. 24 MSG min. thickness coated steel. Panels 10 in. wide. 1-3/4 in. high at the ribs. Panels continuous over two or more spans. A bead of sealant may be used at panel side joints.
2	Roof Deck Fasteners* (Panel Clips) "Snap-Clad Clip"	One piece assembly, 3-1/2 in. wide, 1-7/8 in. high. One panel clip located at each purlin intersection.
3	Panel Fasteners (Screws)	Fasteners used to attach panel clips (Item 2) to purlins to be No. 10-16 by 1 in. long cadmium plated, pancake head, No. 2 phillips drive, No. 3 self-drilling point. Two screws per clip to be used, inserted through 1/4 in. diameter guide holes in clip base.
4	Purlins	No. 16 MSG min. thickness steel (50,000 psi min. yield strength). Spacing for aluminum panels: For Class 90 to be 36 in. OC. For Class 60 to be 48 in. OC. Spacing for steel panels: 22 MSG thick to be 60 in. OC. 24 MSG thick to be 48 in. OC. *Bearing the UL Classification Marking

PETERSEN ALUMINUM CORPORATION PAC-CLAD.COM SALES@PETERSENMAIL.COM

HQ: 1005 Tonne Road
Elk Grove Village, IL 60007
P: 800-PAC-CLAD
F: 800-722-7150

9060 Junction Drive
Annapolis Junction, MD 20701
P: 800-344-1400
F: 301-953-7627

10551 PAC Road
Tyler, TX 75707
P: 800-441-8661
F: 903-581-8592

102 Northpoint Parkway
Acworth, GA 30102
P: 800-272-4482
F: 770-420-2533

1800 S. 7th Ave., Suite 130
Phoenix, AZ 85007
P: 833-750-1935
F: 602-254-6504

1885 Station Parkway NW, Suite B
Andover, MN 55304
P: 877-571-2025
F: 866-901-2935