PAC-TITE LT ROUND DOWNSPOUT & ELBOWS

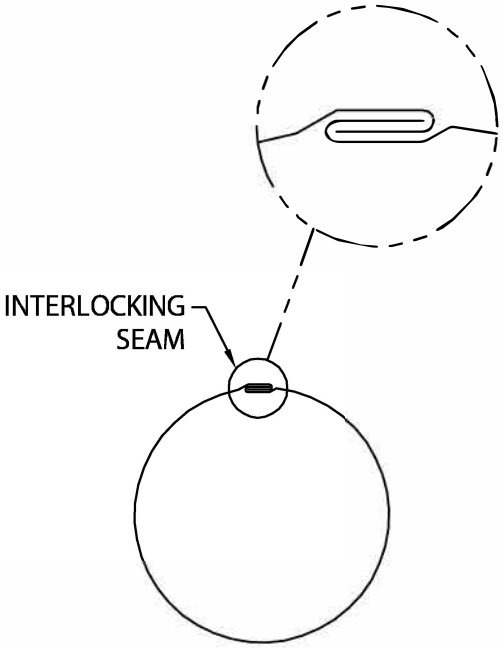

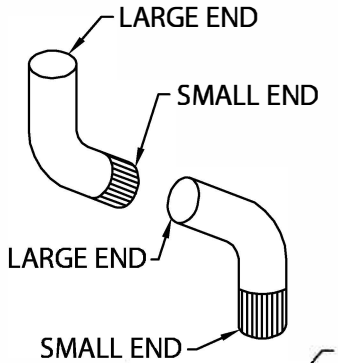

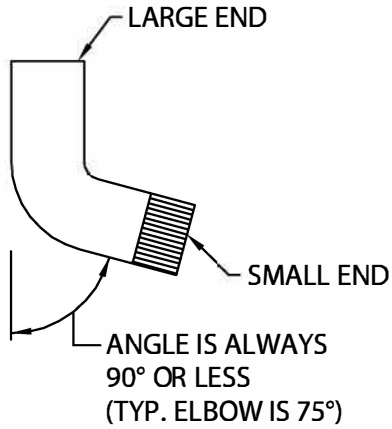

STANDARD ELBOW

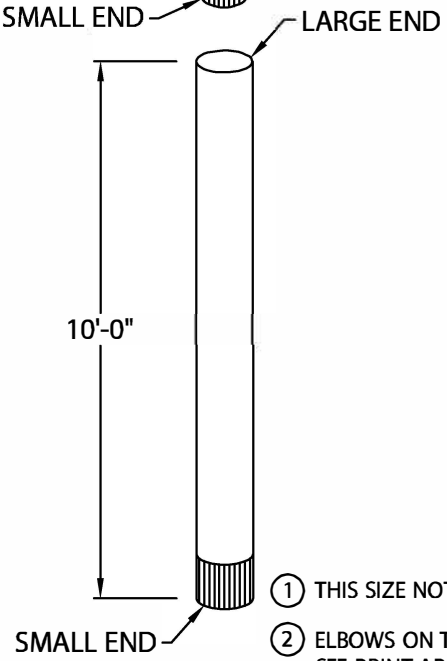

1⅜" WIDE DOWNSPOUT STRAPS
(2 PER 10'-0" LENGTH)

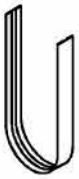

SELECT ONE

- ☐ 3" ROUND DOWNSPOUT (1)
- ☐ 4" ROUND DOWNSPOUT
- ☐ 5" ROUND DOWNSPOUT
- ☐ 6" ROUND DOWNSPOUT
- ☐ 8" ROUND DOWNSPOUT (2)

(1) THIS SIZE NOT AVAILABLE IN 22 GA. GALV. STEEL OR .050" ALUM.

(2) ELBOWS ON THIS PRINT ARE NOT AVAILABLE IN 8" ROUND. SEE PRINT APPROVAL #11013-25843 FOR AVAILABLE ELBOW.

Fabrication will proceed only after receipt of signed print approval.

Print Approval:

Architect and/or contractor shall verify all dimensions, sizes and quantities. All products to be installed in strict accordance with Petersen's printed instructions.

Approved by:_____

Date:_____

MATERIAL:

- ☐ 24 GA. GALV. STEEL
- ☐ 22 GA. GALV. STEEL (1)
- ☐ .032" ALUMINUM
- ☐ .040" ALUMINUM
- ☐ .050" ALUMINUM (1)

OTHER _____

COLOR: _____ FINISH:_____

QUANTITIES:

_____ LINEAL FEET 10'-0" LENGTHS

_____ OUTLETS STYLE A _____ STYLE B _____

A: FLAT B: HALF ROUND TO MATCH GUTTER BOTTOM

_____ STANDARD ELBOWS (_____°)

_____ STANDARD ELBOWS (_____°)

PROJECT:

ARCHITECT:

ROOFING CONTRACTOR:

REPRESENTATIVE/DISTRIBUTOR:

Phone: 800-323-1960 Fax: 800-722-7150
www.pac-clad.com
e-mail: info@pac-clad.com

PAC-CLAD PETERSEN A CARLISLE COMPANY

DATE 06/07/21

DRN BY: JJC

CKD BY: MM

SHT. #__ OF __

DWG# 41013-36358

A